ELSEVIER

Cancer Letters 188 (2002) 59–65

CANCER Letters

www.elsevier.com/locate/canlet

Localization of tumor by chemiluminescence probe during photosensitization action

Juan Wang[1], Da Xing*, Yonghong He, Xuejin Hu

Institute of Laser Life Science, South China Normal University, Guangzhou 510631, China

Received 18 April 2002; received in revised form 1 July 2002; accepted 16 July 2002

Abstract

As a chemiluminescence (CL) probe, 3,7-dihydro-6-{4-{2-(N'-(5-fluoresceinyl) thioureido)ethoxy}phenyl}-2-methylimidazo{1,2-a}pyrazin-3-one dosium salt (FCLA) can sensitively and specifically react with singlet oxygen ($^1O_2$) and superoxide (O_2^-). Based on the fact that photosensitization action involves $^1O_2$ generation, this report presents a novel method for localization of tumor mediated by FCLA. In experiments, FCLA was used as an optical reporter of $^1O_2$ produced from photosensitization reaction of hematoporphyrin derivative. The effects of azide inhibition and deuterium enhancement on photosensitized CL indicated that $^1O_2$ molecules generated during photosensitization action could be measured and imaged. In vivo experiments in vivo with tumor-bearing nude mice showed a clear CL image of tumor. The study suggests that CL imaging method may be applicable to the detection of $^1O_2$ and the diagnosis of superficial tumors. © 2002 Elsevier Science Ireland Ltd. All rights reserved.

Keywords: Chemiluminescence; Photosensitization; Singlet oxygen; 3,7-dihydro-6-{4-{2-(N'-(5-fluoresceinyl) thioureido)ethoxy}phenyl}-2-methylimidazo{1,2-a}pyrazin-3-one dosium salt; Hematoporphyrin derivative

1. Introduction

Chemiluminescence (CL) has become a standard tool in biomedical research [1]. CL probes can be used for immunoassays, nucleic acid identification, measuring enzyme activity, and the detection of small molecules such as O_2^-, H_2O_2, $^1O_2$, NO and adenosine triphosphate. CL imaging from gels, blots and microplates has been developed. Imaging photon detectors are attached to microscopes and allow imaging of CL probes in cells and tissues. CL imaging is also a valuable tool for in vivo studies. Yasui et al [2] reported first in vivo detection and CL imaging of the generated reactive oxygen species (ROS) in the skin of live mice following UVA irradiation in which both a sensitive and specific CL probe and an ultra-weak light imaging apparatus with a charge coupled device (CCD) camera were used. He et al [3] have detected ROS generation during sonodynamic action in vivo and established a tumor diagnosis method by sonodynamic CL imaging. In this study we report a novel photosensitized CL imaging method for tumor localization.

Photodynamic therapy (PDT) involves the selective uptake and retention of photosensitizers in a tumor, followed by irradiation with light, thereby initiating tumor necrosis through formation of ROS and free radicals in the irradiated tissues [4,5]. Lots of

* Corresponding author. Tel.: +86-20-8521-0089; fax: +86-20-8521-6052.

E-mail address: xingda@scnu.edu.cn (D. Xing).

[1] Studying for her doctoral degree in Anhui Institute of Optics and Fine Mechanics, Chinese Academy of Sciences.

0304-3835/02/$ - see front matter © 2002 Elsevier Science Ireland Ltd. All rights reserved.
PII: S0304-3835(02)00547-5

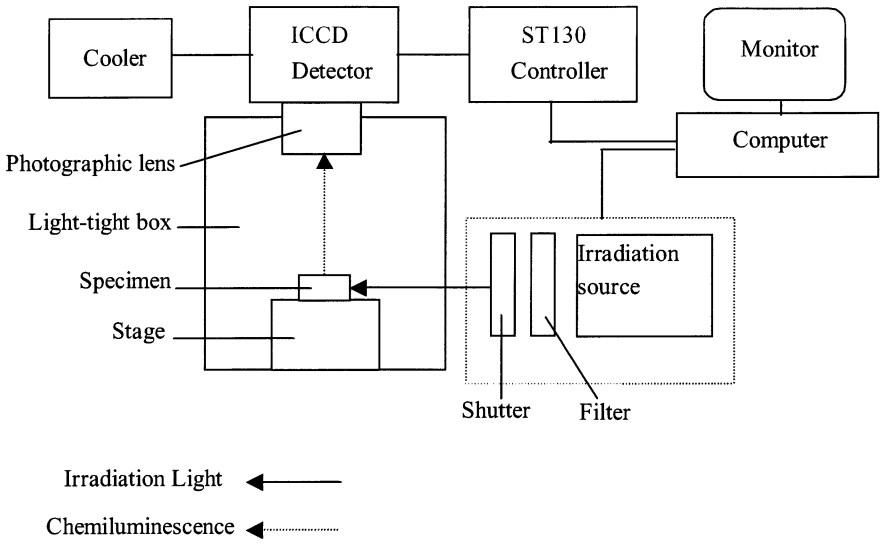

Fig. 1. The schematic setup of photosensitized CL imaging system.

researches demonstrated that the destroying effect is mainly due to the formation of singlet oxygen ($^1O_2$) resulting from the interaction of an excited photosensitizer with molecular oxygen [6].

Based on the key role of $^1O_2$ in PDT, a novel tumor localization method through CL imaging of $^1O_2$ was put forward and studied. The method utilizes a photosensitizer as locator of tumors and a CL probe as a reporter of $^1O_2$. Thus tumors can be shown through detecting the photosensitized CL produced from the reaction of CL probe with $^1O_2$ using a highly sensitive intensified charge coupled device (ICCD) detector.

In the present study, hematoporphyrin derivative (HpD) was chosen as a photosensitizer [7] and 3,7-dihydro-6-{4-{2-(*N'*-(5-fluoresceinyl)thioureido)ethoxy} phenyl}-2-methylimidazo{1,2-a}pyrazin-3-one dosium salt (FCLA) was used as a CL probe for $^1O_2$. FCLA recently developed by Goto and co-workers, is a *Cypridina*luciferin analogue and is characterized by emitting light at the longest wavelength (532 nm) among the CL substances known up to now [8–10]. Conventional photosensitized reactions of HpD were performed in vitro and in vivo. Results indicated that $^1O_2$ produced in photosensitization reaction can be detected by FCLA mediated CL, which is named photosensitized CL in this report. Utilizing the photosensitized CL imaging method to detect tumors in nude mice, a clear emission image of tumor was obtained.

2. Materials and methods

2.1. Reagents

FCLA, purchased from Tokyo Kasei Kogyo Co., was dissolved in double-distilled water and stored at 253 K until needed. Photosensitizers of HpD (100 mg/20 ml), produced in Beijing Institute of Pharmaceutical Industry, were diluted in 0.9% NaCl buffer at physiological pH 7.4 before experiments. Cu-Zn superoxide dismutase (SOD, from bovine erythrocytes) and human serum albumin (HSA, 96%) were obtained from the Sigma Chemical Co. Deuterium oxide (D_2O, 99.9 atom% D, from Aldrich Chemical Company) was stored under nitrogen until needed. Sodium azide (NaN_3), mannitol, catalase and other chemicals were all made in China.

2.2. Experimental setup

The experimental setup (shown in Fig. 1) used to image the photosensitized CL is based upon an ICCD detector (model: ICCD-576-s/1, from Princeton Instruments Inc. USA), which is combined with a photographic lens of big number aperture (Nikon 50 mm, f1.4) and a detector controller (ST-130 controller, from Princeton Instruments, Inc. USA). A 50 W high-pressure mercury lamp (from Bio-Rad Co.) in

conjunction with a 550 nm long-pass filter (OG 550, from Coherent Co. USA) is used as the irradiation source for photosensitization reactions.

All CL measurements were carried out at 298 K. Specimen on a tunable black stage was placed in a light-tight box. Through the photographic lens CL emitted from specimen was collected and imaged onto the sensitive photocathode of ICCD detector in appropriate exposure time. The photocathode was cooled to 233 K to reduce the thermal noise. Spectral response of the detector was 400–950 nm. The two-dimensional images of CL were processed with Winview software and displayed in a 576×384 pixel format. The average counts per unit area were calculated in the specimen regions after subtraction of the background counts.

In order to avoid the disturbance of scattered light, fluorescence and phosphorescence, we did not record the photosensitized CL at the same time while irradiation is performing, but started to record it 2 s after the excitation was stopped.

2.3. Preparation of tumor model

BALB/c-nu/nu male nude mice with body weight of about 25 g were used in this study [3]. A saline suspension of 1×10^7 disaggregated ASTC-a-1 human lung cancer cells was inoculated subcutaneously at the right shoulder of the mice, which caused a tumor to grow at superficial place. ASTC-a-1 cancer cells were derived from the lung carcinoma of a middle-aged man and the doubling time of the cancer cells was 39 h. The photosensitized CL measurements were performed 2 weeks after implantation.

2.4. Measurement of photosensitized CL in model solution

A photosensitizer in phosphate buffered saline (PBS) solution containing serum albumin appears to be a good model for PDT in vivo [11]. In experiments, a standard quartz cuvette ($1 \times 1 \times 4$ cm) was used for measurements of photosensitized CL in vitro. Components of the model solution were prepared just before use. The standard reaction mixture contained 10 μg/ml HpD, 3 μmol/l HSA, 2 μmol/l FCLA and 0.01 mol/l PBS at pH 7.4 in a total volume of 1 ml. The model solution on the stage was irradiated uniformly for 20 s with power density as 0.2 W/cm^2. Two secconds after the irradiation was stopped the photosensitized CL was recorded. As controls, the CL also was detected when either HpD or FCLA was omitted from the model solution. For confirming the origin of photosensitized CL, various ROS quenchers and D_2O were added to the model solution before irradiation and the effects of quenchers and D_2O on CL intensity were measured and compared. The quenchers used included 10 mmol/l NaN_3, 10 μmol/l SOD, 20 mmol/l mannitol and 100 μg/ml catalase. In order to prevent the quenchers from photosensitized destruction, the concentrations of quenchers were increased from generally used concentrations [12] (NaN_3 1 mmol/l, SOD 0.5 μmol/l, mannitol 1 mmol/l and catalase 20 μg/ml) to the concentrations we used.

2.5. Measurement of photosensitized CL in tumor-bearing nude mice

When the tumor reached approximately 1000 mm^3 in volume 2 weeks after inoculation, the nude mice were injected with 200 μg HpD in 0.9% NaCl through tail vein. After a period of 24 h to allow localization of HpD in the tumor, the mice were given subcutaneous injection of 5 μmol/l FCLA of 0.5 ml. Then after 60 min for FCLA to diffuse, the mice were anaesthetized with sodium pentobarbital (50 mg/kg, i.p.). The anaesthetized mice placed in the light-tight box were irradiated uniformly for 60 s with power density of 0.2 W/cm^2 to allow photosensitization reaction to occur in vivo. Photosensitized CL image was started to record 2 s after the irradiation was stopped.

3. Results

3.1. Measurement of photosensitized CL in model solution

The model solution contained HpD, HSA and FCLA in PBS showed considerable light emission 2 s after the irradiation was stopped and the emission intensity attenuated rapidly with time, lasting for about 180 s. The photosensitized CL image of model solution recorded for the first 30 s is given in Fig. 2. As controls, the CL images with lower intensity are also recorded when either HpD or FCLA was omitted from model solution (results are also shown in

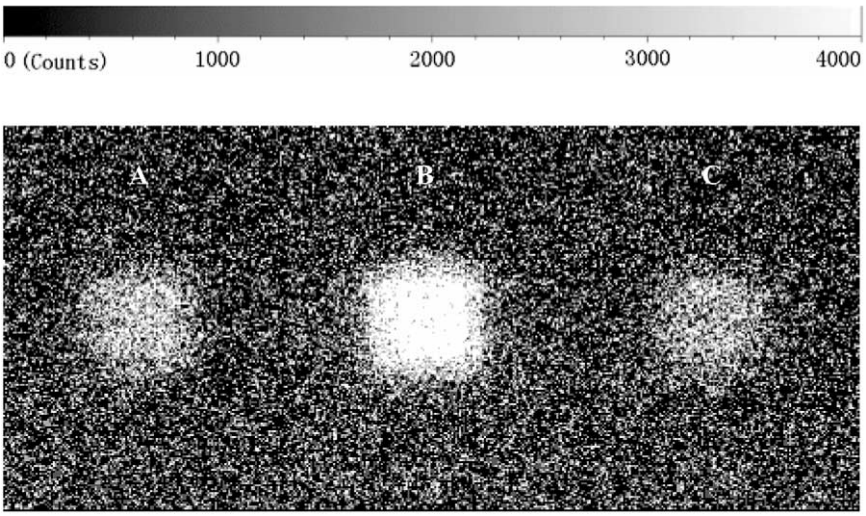

Fig. 2. Images of photosensitized CL in model solution (exposure time is 30 s). (A) Light emission from PBS (10 mmol/l, pH 7.4) with HSA (3 μmol/l), HpD (10 μg/ml) and visible light (>550 nm, 20 s), in the absence of FCLA. (B) Light emission from PBS (10 mmol/l, pH 7.4) with HSA (3 μmol/l), HpD (10 μg/ml), FCLA (2 μM) and visible light (>550 nm, 20 s). (C) Light emission from PBS (10 mmol/l, pH 7.4) with HSA (3 μmol/l), FCLA (2 μmol/l) and visible light (>550 nm, 20 s), in the absence of HpD.

Fig. 2). The comparison of CL intensity of samples in Fig. 2 was given in Fig. 3.

3.2. Effects of quenchers and D_2O on photosensitized CL in model solution

FCLA can selectively react with both $^1O_2$ and O_2^- and give CL with wavelength at 532 nm [10]. $^1O_2$ and $O_2O_2^-$ can be eliminated by NaN_3 and SOD at appropriate amounts, respectively. In order to confirm the effect of $^1O_2$ on the photosensitized CL, several quenchers and D_2O were tested (results in Fig. 4). We observed that the addition of the $O_2O_2^-$ scavenger SOD, the H_2O_2 scavenger catalase and ·OH scavenger mannitol to the above model solution prior to the performance of irradiation, did not cause a very significant decrease in the integral CL inten-

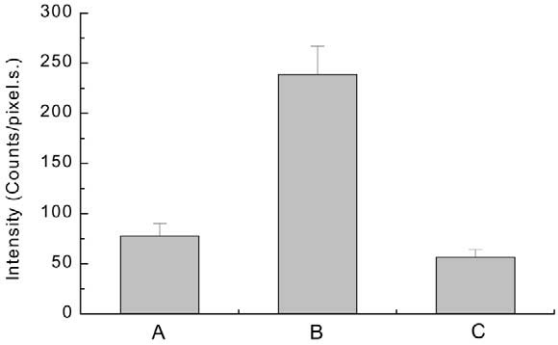

Fig. 3. Comparison of photosensitized CL intensity of samples in Fig. 2 with histogram. Data are presented as mean ± SD of at least three separate experiments. (A–C) as defined for Fig. 2.

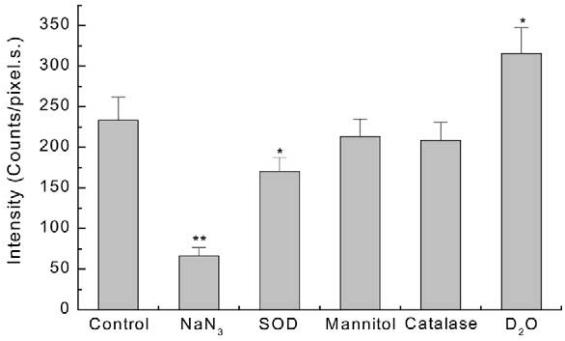

Fig. 4. Effects of quenchers and D_2O on photosensitized CL in model solution. The quenchers and D_2O (99.9 atom% D) were added before irradiation with visible light (>550 nm, 20 s). Quenchers used are the $^1O_2$ quencher NaN_3 (10 mmol/l), the O_2^- scavenger SOD (10 μmol/l), the ·OH scavenger mannitol (20 mmol/l) and the H_2O_2 scavenger catalase (100 μg/ml). Data are presented as mean ± SD of at least three separate experiments. $*P < 0.05$ in comparison with control; $**P < 0.01$ in comparison with control.

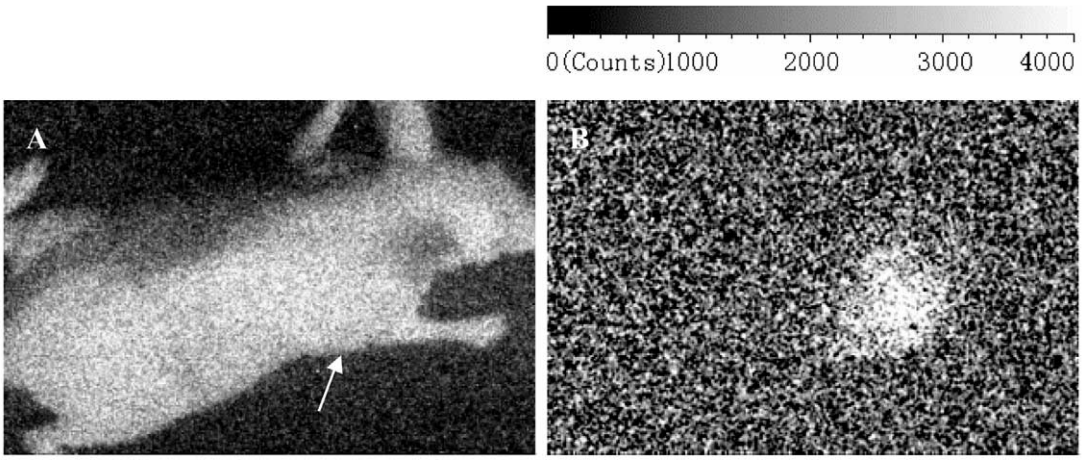

Fig. 5. Image of photosensitized CL mediated by FCLA in tumor-bearing nude mice. (A) Outline of a tumor-bearing nude mouse obtained on illuminating with dim white light. Arrows indicates the tumor is in the right shoulder. (B) Photosensitized CL image from the tumor-bearing nude mouse. The bright area corresponds to the tumor region. Exposure time is 60 s beginning at the 2nd s after irradiation with visible light (>550 nm, 60 s).

sity of the first 30 s (decreased by 27.0%, 10.7% and 8.5% respectively compared with control). However, the CL was inhibited markedly (about 71.5%) by NaN_3, which is an effective quencher of $^1O_2$. Due to the excellent selectivity of FCLA to $^1O_2$ and $O_2O_2^-$, the results suggested that the photosensitized reaction of HpD mostly elicit the formation of $^1O_2$ but not $O_2O_2^-$. (Because of the selectivity of FCLA, in our experiments the generation of ·OH and H_2O_2 in photosensitization action of HpD can not be known well.) The substitution of D_2O for H_2O is often used as evidence that $^1O_2$ is involved, since the lifetime of $^1O_2$ is approximately ten times longer in D_2O than in H_2O [11]. The result of photosensitized CL in D_2O (increased by 35.1%) is also shown in Fig. 4.

3.3. Imaging of photosensitized CL in tumor-bearing nude mice

Fig. 5 shows the images obtained from a tumor-bearing nude mouse. The image in Fig. 5A was obtained on illuminating the mouse with dim white light. This was done for the purpose of positioning the mouse and the tumor. The tumor was located in the right shoulder of the mouse. The photosensitized CL image recorded for the first 60 s is shown in Fig. 5B. With Winview software we knew the tumor region in Fig. 5A is from the pixel (339,196) to (424,251), and the luminescent region in image Fig. 5B is from the pixel (335,198) to (428,249). The luminescent area in Fig. 5B corresponds to the tumor exactly. So the luminescence must be emited from the tumor.

In the in vivo experiments, five nude mice were tested. The statistic data of signal to background ratio are 1.37 ± 0.12. As control, one nude mouse was administered with only 200 μg HpD and another with only 5 μmol/l FCLA of 0.5 ml. But no detectable light emission was measured.

4. Discussion

Since it was discovered that porphyrin-based photosensitizer preferentially accumulated in malignant tissues, HpD has undergone extensive experimental and clinical researches as a drug for PDT of tumors [13–15].

The photosensitization action is a result of three primary processes. First, the ground state of a sensitizer (S_0) is excited to the excited singlet state ($^1S_1$). Population from this excited state is transferred by intersystem crossing to the lowest triplet state ($^3S_1$). The triplet state sensitizers may exert damaging effects through two main mechanisms. In type I reaction, electron transfer produces free radicals. In type II

reaction, collisional energy transfer produces highly reactive $^1O_2$:

$$S_0 + hv \rightarrow {}^1S_1$$

$$^1S_1 \rightarrow {}^3S_1$$

$$^3S_1 + RH \rightarrow \text{free radicals (type I, electron transfer)}$$

$$^3S_1 + {}^3O_2 \rightarrow S_0 + {}^1O_2 \text{ (type II, energy transfer)}$$

Free radicals and $^1O_2$ produced as results of type I and type II reactions can destroy a wide variety of cells.

For many years attention has concentrated on the type II production of $^1O_2$, which has frequently been suggested to be the major intermediate for photodynamic actions both in vitro and in vivo [16,17]. In this study, the measurements of photosensitized CL demonstrated the $^1O_2$ formation in photosensitization reaction of HpD. The effects of azide inhibition and deuterium enhancement verified $^1O_2$ generation further. The study also shows that there is $O_2O_2^-$ generation in photosensitization reaction of HpD but the amounts of it are minor and of no significance.

As a sensitive CL probe, FCLA can selectively react with $^1O_2$ and $O_2O_2^-$ to give emission at 532 nm [18,19]. In model system, faint emission was observed when either HpD or FCLA was omitted. The emission of model solution without FCLA may directly come from direct deexcitation of $^1O_2$ and the reaction of excited photosensitizers with HSA [20], and emission without HpD may be from the slow auto-oxygenation of FCLA by dissolved oxygen [21]. In tumor-bearing nude mice, due to the accumulation of HpD in malignant tissues, a clear photosensitization CL image of tumor was obtained. The appreciable light emission of this FCLA mediated CL enables us to apply this method to the diagnosis of cancer. Although this method can only be adapted to the detection of emission from superficial tumors at present, because the emission wavelength of FCLA (532 nm) is too short to penetrate biological tissue, it should be pointed out that with this novel method, longer wavelength irradiation light (>550 nm) is converted to shorter wavelength CL (532 nm), so the disturbance of autofluorescence can be avoided completely.

In summary, this study demonstrates that the main product from photosensitization reaction of HpD is $^1O_2$ but not $O_2O_2^-$ and the $^1O_2$ can be detected with the CL probe of FCLA. The results of photosensitized CL imaging in vivo indicate the novel photosensitization localization method of tumors has potential applications in clinics for tumor diagnosis.

Acknowledgements

This work has been supported by the National Science Fund for Distinguished Young Scholars of China (No. 69725009) and the Natural Science Foundation of Guangdong Province (No. 015012).

References

[1] R. Creton, L.F. Jaffe, Chemiluminescence microscopy as a tool in biomedical research, Biotechniques 31 (2001) 1098–1105.

[2] H. Yasui, H. Sakurai, Chemiluminescent detection and imaging of reactive oxygen species in live mouse skin exposed to UVA, Biochem. Biophys. Res. Commun. 269 (2000) 131–136.

[3] Y. He, D. Xing, G. Yan, K. Ueda, Chemiluminescence F.C.L.A. from sonodynamic action in vitro and in vivo, Cancer Lett. 182 (2002) 141–145.

[4] A. Casas, H. Fukuda, P. Riley, A.M. Batlle, Enhancement of aminolevulinic acid based photodynamic therapy by adriamycin, Cancer Lett. 121 (1997) 105–113.

[5] A. Douplik, A.A. Stratonnikov, V.B. Loshchenov, V.S. Lebedeva, V.M. Derkacheva, A. Vitkin, V.D. Rumyanceva, S.G. Kusmin, A.F. Mironov, E.A. Lukyanets, Study of photodynamic reactions in human blood, J. Biomed. Opt. 5 (2000) 338–349.

[6] T. Ito, Cellular and subcellular mechanisms of photodynamic action: the singlet oxygen hypothesis as a driving force in recent research, Photochem. Photobiol. 28 (1978) 493–508.

[7] T.W. Sery, T.J. Dougherty, Photoradiation of rabbit ocular malignant melanoma sensitized with hematoporphyrin derivative, Curr. Eye Res. 3 (1984) 519–528.

[8] M. Shimada, S. Kawamoto, Y. Nakatsuka, M. Watanabe, Localization of superoxide anion in the red tide alga *Chattonella antiqua*, J. Histochem. Cytochem. 41 (1993) 507–511.

[9] K. Sugioka, M. Nakano, S. Kurashige, Y. Akuzawa, T. Goto, Chemiluminescent a probe with a Cypridina luciferin analog 2-methyl-6-phenyl-3,7-dihydroimidazo[1,2-a]pyrazin-3-one, specific and sensitive for O_2^- production in phagocytizing macrophages, FEBS Lett. 197 (1986) 27–30.

[10] M. Nakano, M. Kikuyama, T. Hasegawa, T. Ito, K. Sakurai, K. Hiraishi, E. Hashimura, M. Adachi, The first observation of O_2^- generation at real time in vivo from non-Kupffer sinusoidal cells in perfused rat liver during acute ethanol intoxication, FEBS Lett. 372 (1995) 140–143.

[11] R. Nilsson, P.B. Merkel, D.R. Kearns, Unambiguous evidence

for the participation of singlet oxygen in photodynamic oxidation of amino acids, Photochem. Photobiol. 16 (1972) 117–124.

[12] Y. Liu, K. Stolze, A. Dadak, H. Nohl, Light emission resulting from hydroxylamine-induced singlet oxygen formation of oxidizing LDL particles, Photochem. Photobiol. 66 (1997) 443–449.

[13] C.M. Yow, J.Y. Chen, N.K. Mak, N.H. Cheung, A.W. Leung, Cellular uptake, subcellular localization and photodamaging effect of temoporfin (mTHPC) in nasopharyngeal carcinoma cells: comparison with hematoporphyrin derivative, Cancer Lett. 157 (2000) 123–131.

[14] C. Tanielian, C. Schweitzer, R. Mechin, C. Wolff, Quantum yield of singlet oxygen production by monomeric and aggregated forms of hematoporphyrin derivative, Free Radical Biol. Med. 30 (2001) 208–212.

[15] M. Roslaniec, H. Weitman, D. Freeman, Y. Mazur, B. Ehrenberg, Liposome binding constants and singlet oxygen quantum yields of hypericin, tetrahydroxy helianthrone and their derivatives: studies in organic solutions and in liposomes, J. Photochem. Photobiol., B 57 (2000) 149–158.

[16] I. Kraljic, Detection of singlet oxygen and its role in dye-sensitized photooxidation in aqueous and micellar solutions, Biochimie 68 (1986) 807–811.

[17] J. Dahle, H.B. Steen, J. Moan, The mode of cell death induced by photodynamic treatment depends on cell density, Photochem. Photobiol. 70 (1999) 363–367.

[18] M. Nakano, Detection of active oxygen species in biological systems, Cell. Mol. Neurobiol. 18 (1998) 565–579.

[19] S. Koga, M. Nakano, K. Uehara, Mechanism for the generation of superoxide anion and singlet oxygen during heme compound-catalyzed linoleic acid hydroperoxide decomposition, Arch. Biochem. Biophys. 289 (1991) 223–229.

[20] T. Takemura, N. Ohta, S. Nakajima, I. Sakata, The mechanism of photosensitization in photodynamic therapy: chemiluminescence caused by photosensitization of porphyrins in saline containing human serum albumin, Photochem. Photobiol. 55 (1992) 137–140.

[21] K. Teranishi, O. Shimomura, Coelenterazine analogs as chemiluminescent probe for superoxide anion, Anal. Biochem. 249 (1997) 37–43.